SIEMENS

Dishwasher

SN... SX...

en User manual

Register your product on My Siemens and discover exclusive services and offers.
siemens-home.bsh-group.com/welcome

The future moving in.

Siemens Home Appliances

Table of contents

Safety 4
General information 4
Intended use 4
Restriction on user group 4
Safe installation 5
Safe use 6
Damaged appliance 8
Risk to children 9
Safety systems 10

Preventing material damage 11
Safe installation 11
Safe use 11

Childproof lock[1] 12
Door lock 12

Environmental protection and saving energy 13
Disposing of packaging 13
Saving energy 13
Zeolith drying Ⓩ 13
AquaSensor[1] 14
Sensors 14

Installation and connection 14
Scope of supply 14
Installing and connecting the appliance 15
Drainage connection 15
Drinking water connection 15
Electrical connection 16

Familiarising yourself with your appliance 17
Appliance 17
Controls 18

Programmes 21
Information for test institutes 23

Additional functions 23

Features 24
Top basket 25
Bottom basket 26
Cutlery basket 26
Cutlery drawer 26
Etagere 27
Folding prongs 28
Small items holder 28
Knife shelf 29
Baking sheet spray head 29
Basket heights 29

Before using for the first time 30
Performing initial start-up 30

Water softening system 31
Overview of water hardness settings 31
Setting water softening system 31
Special salt 32
Switching off water softening system 32
Regeneration of the water softening system 33

Rinse aid system 33
Rinse aid 33
Setting the amount of rinse aid 34
Switching rinse aid system off 34

Detergent 35
Suitable detergents 35
Unsuitable detergents 36
Information on detergents 36
Adding detergent 36

Tableware 37
Damage to glass and tableware 37
Arranging tableware 38
Removing tableware 39

[1] Depending on the appliance specifications

Basic operation 39
Opening appliance door 39
Switching on appliance 39
Setting a programme 39
Setting additional functions 40
Setting timer programming 40
Starting the programme 40
Interrupting programme 40
Terminate programme..... 40
Display programme information..... 41
Switching off appliance 41

Basic settings..... 42
Overview of basic settings 42
Changing basic settings..... 44
Setting the time 44

Cleaning and servicing 44
Cleaning the tub 44
Self-cleaning interior[1]..... 44
Cleaning products 45
Tips on appliance care..... 45
Filter system 45
Cleaning spray arms 46

Troubleshooting..... 47
Appliance safety 47
Error code / Fault display / Signal..... 47
Washing results..... 49
Information on display panel..... 56
Malfunctions 56
Mechanical damage..... 57
Noise 57
Clean wastewater pump..... 59

Transportation, storage and disposal 59
Removing the appliance 59
Protect appliance from frost..... 59
Transporting the appliance 60
Disposing of old appliance 60

Customer Service..... 60
Product number (E-Nr.) and production number (FD)..... 61
AQUA-STOP guarantee[1]..... 61

Technical data 61

[1] Depending on the appliance specifications

Safety

Please read the safety information to ensure that you use the appliance safely.

General information

You can find general information about this instruction manual here.

- Read this instruction manual carefully. Only this ensures you will use the appliance safely and efficiently.
- This manual is intended for the user of the appliance.
- Follow the safety instructions and warnings.
- Keep the instruction manual and the product information safe for future reference or for the next owner.
- Check the appliance after unpacking it. Do not connect the appliance if it has been damaged in transit.

Intended use

Please read the information on intended use to ensure you use the appliance correctly and safely.
Only use this appliance:

- As specified in this instruction manual.
- For cleaning household tableware.
- In private households and in enclosed spaces in a domestic environment.
- Up to an altitude of max. 2500 m above sea level.

Restriction on user group

Avoid risks to children and vulnerable persons.
This appliance may be used by children aged 8 or over and by people who have reduced physical, sensory or mental abilities or inadequate experience and/or knowledge, provided that they are supervised or have been instructed on how to use the appliance safely and have understood the resulting dangers.
Do not let children play with the appliance.

Cleaning and user maintenance must not be performed by children unless they are being supervised.
Keep children under the age of 8 years away from the appliance and power cable.

Safe installation

Follow these safety instructions when installing the appliance.

⚠ **WARNING – Risk of injury!**
Improper installation may cause injury.
- ▶ When installing and connecting the appliance, follow the instructions in the manual and installation instructions.

⚠ **WARNING – Risk of electric shock!**
Improper installation is dangerous.
- ▶ Connect and operate the appliance only in accordance with the specifications on the rating plate.
- ▶ Connect the appliance to a power supply with alternating current only via a properly installed socket with earthing.
- ▶ The protective conductor system of the domestic electrical installation must be properly installed.
- ▶ Never equip the appliance with an external switching device, e.g. a timer or remote control.
- ▶ When the appliance is installed, the mains plug of the power cord must be freely accessible. If free access is not possible, an all-pole isolating switch must be installed in the permanent electrical installation according to the installation regulations.
- ▶ When installing the appliance, check that the power cable is not trapped or damaged.

⚠ **WARNING – Risk of fire!**
It is dangerous to use an extended power cord and non-approved adapters.
- ▶ Do not use extension cables or multiple socket strips.
- ▶ If the power cord is too short, contact Customer Service.
- ▶ Only use adapters approved by the manufacturer.

⚠ **WARNING – Risk of electric shock!**
Cutting through the supply hose or immersing the Aqua-Stop valve in water is dangerous.
- ▶ Never immerse the plastic housing in water. The plastic housing on the supply hose contains an electric valve.
- ▶ Never cut through the supply hose. The supply hose contains electric power cables.

⚠ **WARNING – Risk of injury!**
Hinges move when opening and closing the appliance door and can cause injury.
- ▶ If built-under or integrable appliances are not in a cavity so that one side is accessible, the hinge area must be covered at the side. Covers are available from Customer Service or specialist outlets.

⚠ **WARNING – Risk of tipping!**
Improper installation may cause the appliance to tip up.
- ▶ Only install built-under or integrable appliances under a continuous worktop that is securely connected to adjacent cabinets.

⚠ **WARNING – Risk of burns!**
If the appliance is not installed properly, this may result in burns.
- ▶ With free-standing appliances, ensure that they are installed with the back panel against a wall.

Safe use

Follow these safety instructions when using the appliance.

⚠ **WARNING – Risk of serious harm to health!**
Failure to comply with safety instructions and directions for use on packagings of detergent and rinse aid products may cause serious harm to health.
- ▶ Follow the safety instructions and directions for use on the packagings of detergent and rinse aid products.

⚠ **WARNING – Risk of explosion!**

- Adding solvents to the interior of the appliance may cause explosions.
  - ▶ Never add solvents to the interior of the appliance.
- Highly caustic alkaline or highly acidic cleaning agents in conjunction with aluminium parts in the interior of the appliance may cause explosions.
  - ▶ Never use highly caustic alkaline or highly acidic cleaning agents, in particular commercial or industrial products, e.g. for the Machine Care programme, in conjunction with aluminium parts.
  - ▶ Do not put any aluminium parts in the interior of the appliance.

⚠ **WARNING – Risk of injury!**

- Leaving the appliance door open may result in injury.
  - ▶ Only open the appliance door to load or unload tableware in order to prevent accidents, e.g. through tripping.
  - ▶ Do not sit or stand on the appliance door when open.
- Knives and utensils with sharp points can cause injuries.
  - ▶ Arrange knives and utensils with sharp points in the cutlery basket with the points downwards, on the knife shelf or in the cutlery drawer.

⚠ **WARNING – Risk of scalding!**

If you open the appliance door while the programme is running, hot water may splash out of the appliance.

- ▶ Open the appliance door carefully if the programme is still running.

⚠ **WARNING – Risk of tipping!**

Overfilling the Baskets may cause the appliance to tip up.

- ▶ Never overfill the Baskets with free-standing appliances.

⚠ **WARNING – Risk of electric shock!**

- An ingress of moisture can cause an electric shock.
  - ▶ Only use the appliance in enclosed spaces.
  - ▶ Never expose the appliance to intense heat or humidity.

- ▶ Do not use steam- or high-pressure cleaners to clean the appliance.

- If the insulation of the power cord is damaged, this is dangerous.
  - ▶ Never let the power cord come into contact with hot appliance parts or heat sources.
  - ▶ Never let the power cord come into contact with sharp points or edges.
  - ▶ Never kink, crush or modify the power cord.

⚠ **WARNING – Risk of burns!**
The blow opening of the Zeolith container becomes hot and can cause burns.
- ▶ Never touch the blow opening of the Zeolith container.

Damaged appliance

Follow the safety instructions if the appliance is damaged.

⚠ **WARNING – Risk of electric shock!**

- If the appliance or the power cord is damaged, this is dangerous.
  - ▶ Never operate a damaged appliance.
  - ▶ Never operate an appliance with a cracked or fractured surface.
  - ▶ Never pull on the power cord to unplug the appliance. Always unplug the appliance at the mains.
  - ▶ If the appliance or the power cord is damaged, immediately unplug the power cord or switch off the fuse in the fuse box and turn off the water tap.
  - ▶ Call Customer Service. → *Page 60*
  - ▶ Repairs to the appliance should only be carried out by trained specialist staff.
- Improper repairs are dangerous.
  - ▶ Repairs to the appliance should only be carried out by trained specialist staff.
  - ▶ Only use genuine spare parts when repairing the appliance.

- ▶ If the power cord of this appliance is damaged, it must be replaced with a special connection cable, which is available from the manufacturer or his Customer Service.

Risk to children

Follow the safety instructions if there are children in your home.

⚠ **WARNING – Risk of suffocation!**

- Children may put packaging material over their heads or wrap themselves up in it and suffocate.
  - ▶ Keep packaging material away from children.
  - ▶ Do not let children play with packaging material.
- Children may breathe in or swallow small parts, causing them to suffocate.
  - ▶ Keep small parts away from children.
  - ▶ Do not let children play with small parts.

⚠ **WARNING – Risk of harm to health!**

Children can lock themselves in the appliance, thereby putting their lives at risk.

- ▶ With redundant appliances, unplug the power cord. Then cut through the cord and damage the lock on the appliance door beyond repair so that the appliance door will no longer close.

⚠ **WARNING – Risk of crushing!**

With higher-level appliances, children can become crushed between the appliance door and cabinet doors underneath.

- ▶ Keep an eye on children when opening and closing the appliance door.

⚠ **WARNING – Risk of chemical burns!**

Rinse aid and detergent may cause chemical burns to the mouth, throat and eyes.

- ▶ Keep children away from detergent and rinse aid products.
- ▶ Keep children away from the appliance when open. The water in the interior of the dishwasher is not drinking water. It may contain residues of detergents and rinse aid.

⚠ **WARNING – Risk of injury!**
Children may get their fingers caught in the slots of the tablet collecting tray and injure themselves.
▶ Keep children away from the appliance when open.

⚠ **WARNING – Risk of suffocation!**
Children may become trapped in the appliance and suffocate.
▶ Use the childproof lock if fitted.
▶ Never let children play with or operate the appliance.

Safety systems

Protect children from possible hazards resulting from the appliance.
Depending on the features of the model, the appliance comes with a
→ *"Childproof lock", Page 12*.

Preventing material damage

Follow these instructions to prevent material damage to your appliance, accessories or other objects in your kitchen.

Safe installation

Follow the instructions when installing the appliance.

ATTENTION!

- Improper installation of the appliance may cause damage.
  - ▸ If the dishwasher is installed above or below other domestic appliances, follow the information on installation in combination with a dishwasher in the installation instructions for the individual appliances.
  - ▸ If there is no information or if the installation instructions do not include the relevant information, contact the manufacturer of these appliances to check that the dishwasher can be installed above or below these appliances.
  - ▸ If no information is available from the manufacturer, the dishwasher should not be installed above or below such appliances.
  - ▸ To ensure the safe operation of all domestic appliances, continue following the installation instructions for the dishwasher.
  - ▸ Do not install the dishwasher under a hob.
  - ▸ Do not install the dishwasher near heat sources, e.g. radiators, heat storage tanks, ovens or other appliances that generate heat.
- Modified or damaged water hoses may result in material damage and damage to the appliance.
  - ▸ Never kink, crush, modify or cut through water hoses.
  - ▸ Only use the water hoses supplied with the appliance or genuine spare hoses.
  - ▸ Never re-use water hoses that have been used before.
- If the water pressure is too high or too low, this may impair functioning of the appliance.
  - ▸ Make sure that the water pressure in the water supply system is min. 50 kPa (0,5 bar) and max. 1000 kPa (10 bar).
  - ▸ If the water pressure exceeds the maximum value specified, a pressure-reducing valve must be installed between the drinking water connection and the hose set of the appliance.

Safe use

Follow the instructions when using the appliance.

ATTENTION!

- Escaping water vapour can damage fitted units.
  - ▸ When the programme ends, leave the appliance to cool down for a while before opening the door.
- Special salt can damage the tub due to corrosion.
  - ▸ To make sure that any special salt that escapes is washed out of the tub, add the special salt to the dispenser for special salt immediately before the programme starts.
- Detergent may damage the water softening system.
  - ▸ Only fill the dispenser of the water softening system with special dishwasher salt.

- Unsuitable cleaning agents may damage the appliance.
  - ▶ Do not use a steam cleaner.
  - ▶ So as not to scratch the finish on the appliance, do not use sponges with a rough surface or abrasive cleaning agents.
  - ▶ To prevent corrosion, do not use sponge cloths on dishwashers with a stainless steel front or rinse such cloths thoroughly several times before using them for the first time.

Childproof lock[1]

The childproof lock lets you protect children from possible hazards resulting from the appliance.
Depending on the features of the model, the appliance comes with a door lock.

Door lock

The door lock is a mechanical safety system and makes it more difficult to open the appliance door.
You can activate or deactivate the door lock.

⚠ **WARNING**
Risk of suffocation!
Children may become trapped in the appliance and thus suffocate.
▶ Activate the door lock and close the appliance door.

→ *"Opening appliance door", Page 39*

Activating the door lock

Note: The door lock remains activated until it is deactivated manually.

1. Open the appliance door.
2. Pull the catch of the childproof lock forwards ① and close the appliance door ②.

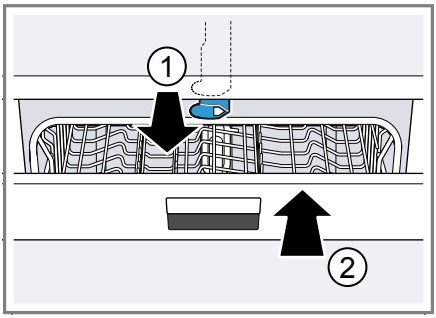

Deactivating the door lock

1. Open the appliance door.
2. Push the catch of the childproof lock to the right ① and slide it backwards ②.

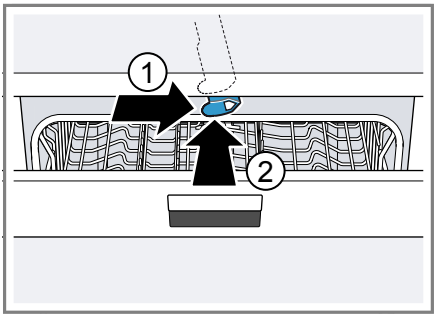

3. Close the appliance door.

[1] Depending on the appliance specifications

Environmental protection and saving energy

Help protect the environment by using your appliance in a way that conserves resources and by disposing of reusable materials properly.

Disposing of packaging

The packaging materials are environmentally compatible and can be recycled.

- Sort the individual components by type and dispose of them separately.

  Information about current disposal methods are available from your specialist dealer or local authority.

Saving energy

If you follow these instructions, your appliance will use less electricity and less water.

Use the Eco 50° programme.

+ The Eco 50° programme is energy efficient and environmentally friendly.
  → *"Programmes", Page 21*

If you do not have much tableware to wash, use the additional Half Load function.[1]

+ The programme will adjust to a lower load and consumption will be reduced.
  → *"Additional functions", Page 23*

Use the additional Energy Save function.[1]

+ The running time is increased and consumption reduced.

Change the sensor setting to the default.

+ Consumption is reduced.
  → *"Sensors", Page 14*

Zeolith drying automatically helps to save energy.

+ → *"Zeolith drying Ⓩ", Page 13*

Zeolith drying Ⓩ

The appliance features a Zeolith container. Zeolith drying lets you save energy.
Zeolite is a mineral that can store moisture and heat energy and then release them again.
During dishwashing heat energy is used to heat up the washing water and dry the mineral.
During the drying phase moisture from the interior of the dishwasher is stored in the mineral and heat energy is released. The heat energy is blown out into the interior of the dishwasher with dry air. This speeds up and improves drying.
Zeolith drying therefore saves a great deal of energy.

Tip: To avoid impairing Zeolith drying performance, do not position tableware parts directly in front of the intake opening or the blow opening of the Zeolith container.
Do not position heat-sensitive tableware parts directly in front of the blow opening of the Zeolith container.
→ *"Appliance", Page 17*

[1] Depending on the appliance specifications

AquaSensor[1]

The AquaSensor is an optical measuring device (light barrier) which measures the turbidity of the washing water. You can save water with the AquaSensor.
Use of the AquaSensor depends on the programme. If the soiling level is low, the washing water is used in the next wash cycle, so reducing water consumption by 3-6 litres. If the soiling level is is greater, the washing water is drained off and replaced with fresh water. In the automatic programmes the temperature and running time are additionally adjusted to the level of soiling.

Sensors

The sensors adjust the programme sequence and strength in the automatic programmes depending on the level and type of soiling.
The sensor has different sensitivity settings that can be changed in the basic settings.
→ *"Changing basic settings", Page 44*

Sensor setting	Description
Standard	Optimum setting for a mixed load and heavily soiled tableware. Saves both energy and water.
Sensitive	Adjusts the programme strength for effective removal of food remnants even with low soiling levels. Energy and water consumption are adjusted accordingly.
Very sensitive	Adjusts the programme strength for difficult conditions of use, e.g. stubborn dried-on food remnants. Recommended setting when using organic or ecological detergents containing low levels of active agents. Energy and water consumption are adjusted accordingly.

Installation and connection

To ensure proper operation, connect the appliance to the power and water supply correctly. Observe the specified criteria and the installation instructions.

Scope of supply

After unpacking all parts, check for any damage in transit and completeness of the delivery.
If you have any complaints, contact the dealer who sold you the appliance or our Customer Service.

Note: The appliance was tested at the factory to check it is in working order. It is possible that water has left marks on the appliance. These marks will disappear after the first wash cycle.

The delivery consists of the following:
- Dishwasher
- Instruction manual
- Installation instructions
- Warranty[1]
- Installation material
- Steam guard plate[1]

[1] Depending on the appliance specifications

- Rubber apron[1]
- Mains cable
- Quick reference guide[1]

Installing and connecting the appliance

You can position your built-under or integrable appliance in a fitted kitchen between wooden and plastic walls. If you subsequently install your dishwasher as a free-standing appliance, you must stop it from tipping over, e.g. by screwing it to the wall or installing it under a continuous worktop that is securely connected to adjacent cabinets.

1. Follow the safety instructions. → *Page 4*
2. Follow the instructions for electrical connection. → *Page 16*
3. Check the Scope of supply → *Page 14* and the condition of the appliance.
4. Consult the installation instructions for the installation dimensions required.
5. Make the appliance level using the height-adjustable feet.

   Make sure that the appliance is standing on the floor securely.
6. Install the drainage connection. → *Page 15*
7. Install the drinking water connection. → *Page 15*
8. Connect the appliance to the electricity supply.

Drainage connection

Connect your appliance to drainage connection so dirty water is discharged via the wash cycle.

Installing the drainage connection

1. Consult the installation instructions supplied for the steps required here.
2. Connect the wastewater hose to the outlet connection of the siphon using the enclosed parts.
3. When doing so, check that the wastewater hose is not kinked, crushed or twisted.
4. Also check that there is no cover in the drainage system preventing the wastewater from being discharged.

Drinking water connection

Connect your appliance to a drinking water connection.

Installing the drinking water connection

Note: If you are replacing the appliance, you must use a new water supply hose.

1. Consult the installation instructions supplied for the steps required here.
2. Connect the appliance to the drinking water connection using the enclosed parts.

   Observe the Technical data → *Page 61*.
3. When doing so, check that the drinking water connection is not kinked, crushed or twisted.

[1] Depending on the appliance specifications

Electrical connection

Connect your appliance to the power supply.

Connecting the appliance to the electricity supply

Notes

- Follow the Safety instructions → *Page 5*.
- Connect the appliance to alternating current only, in the range of 220 - 240 V and 50 Hz or 60 Hz.
- Please note that the water safety system is only functional if there is a power supply.

1. Insert the non-heating appliance plug of the power cable into the appliance.
2. Insert the mains plug of the appliance into a nearby socket.

   The connection data for the appliance can be found on the rating plate.
3. Check that the mains plug is inserted properly.

Familiarising yourself with your appliance

Familiarise yourself with the parts of your appliance.

Appliance

You can find an overview of the parts of your appliance here.

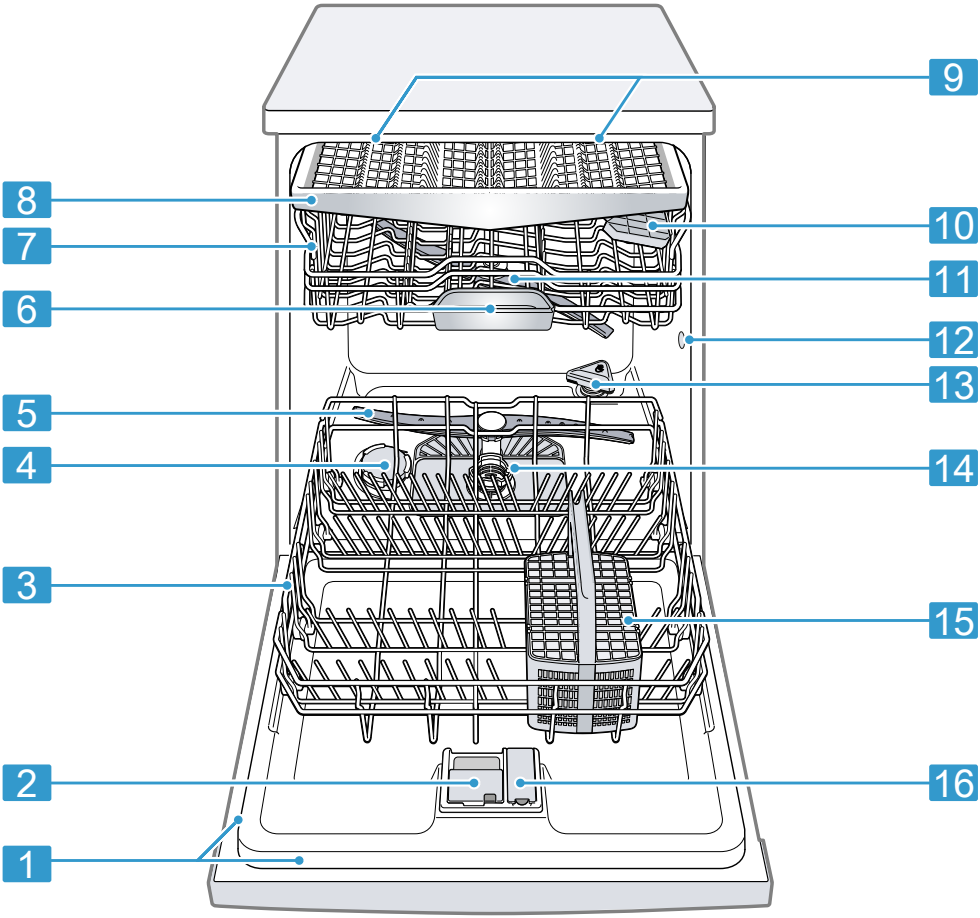

1	Rating plate	Rating plate with E number and FD number → *Page 61*. The data you need for Customer Service → *Page 60*.

[1] Depending on the appliance specifications

2	Detergent dispenser	Detergent → *Page 35* is added to the detergent dispenser.
3	Bottom basket	Bottom basket → *Page 26*
4	Dispenser for special salt	Add special salt for the Water softening system → *Page 31* to the dispenser for special salt.
5	Lower spray arm	The lower spray arm washes the tableware in the bottom basket. If the tableware has not been washed properly, clean the spray arms. → *"Cleaning spray arms", Page 46*
6	Tablet collecting tray	During the wash cycle tablets automatically fall out of the detergent dispenser into the tablet collecting tray where they can fully dissolve.
7	Top basket	Top basket → *Page 25*
8	Cutlery drawer[1]	Cutlery drawer → *Page 26*
9	EmotionLight[1]	Interior lighting of the appliance. → *"Overview of basic settings", Page 42*
10	Etagere	Etagere → *Page 27*
11	Upper spray arm	The upper spray arm washes the tableware in the top basket. If the tableware has not been washed properly, clean the spray arms. → *"Cleaning spray arms", Page 46*
12	Intake opening of the Zeolith container	The intake opening is required for Zeolith drying → *Page 13*.
13	Blow opening of the Zeolith container	The blow opening is required for Zeolith drying → *Page 13*.
14	Filter system	Filter system → *Page 45*
15	Cutlery basket[1]	Cutlery basket → *Page 26*
16	Dispenser for rinse aid	Add rinse aid for the Rinse aid system → *Page 33* to the dispenser for rinse aid.

[1] Depending on the appliance specifications

Controls

The controls are used to configure all functions of your appliance and to obtain information about the operating status.
With some buttons you can perform different functions.

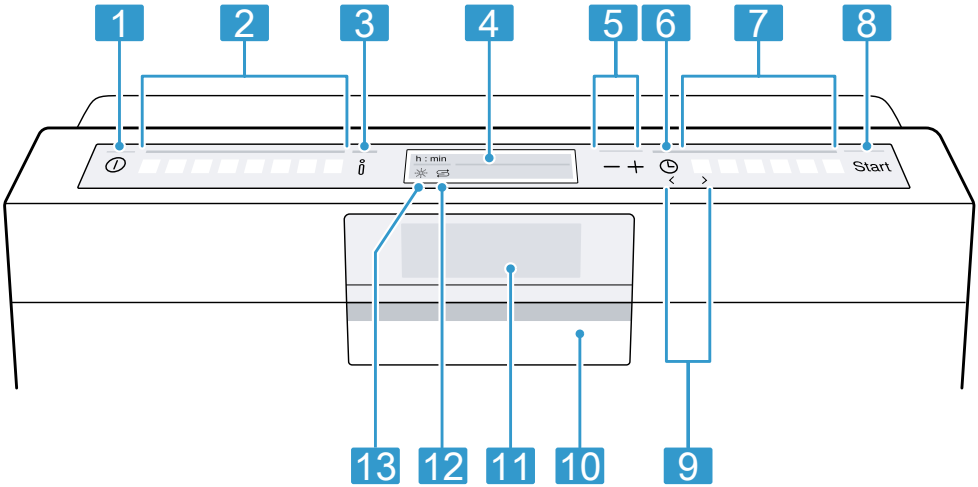

1	ON/OFF button ⏻	Switching on the appliance → *Page 39* Switching off the appliance → *Page 41*
2	Programme buttons	Programmes → *Page 21*
3	Info button ⓘ	If you press ⓘ, the display shows information about selected programmes, basic settings and additional functions. If you press ⓘ for approx. 3 seconds, you can open the menu. → *"Changing basic settings", Page 44*
4	Display	The display shows information about programmes, basic settings or additional functions. You can change the basic settings via the display and the setting buttons. → *"Changing basic settings", Page 44*
5	Setting buttons	Changing basic settings → *Page 44*
6	Timer programming	Setting timer programming → *Page 40*
7	Programme buttons and additional functions	Programmes → *Page 21* Additional functions → *Page 23*
8	Start button Start and reset button Reset 3 sec.	Starting the programme → *Page 40* Terminating the programme → *Page 40*
9	<> buttons	You can use these buttons to scroll between the basic settings. → *"Changing basic settings", Page 44*
10	Door opener[1]	Opening the appliance door → *Page 39*

[1] Depending on the appliance specifications

11	Display[1]	The display shows information about programmes, basic settings or additional functions. You can change the basic settings via the display and the setting buttons. → *"Changing basic settings", Page 44*
12	Special salt refill indicator	Water softening system → *Page 31*
13	Rinse aid refill indicator	Rinse aid system → *Page 33*

[1] Depending on the appliance specifications

Programmes

You can find an overview of the programmes that can be selected here. Different programmes, which can be found on the control panel of your appliance, are available depending on the appliance configuration.
The running time may vary depending on the programme selected. The running time depends on the water temperature, the quantity of tableware, the level of soiling and the Additional function → *Page 23* selected. The running time will change if the rinse aid system is switched off or rinse aid needs to be added.
The consumption values can be found in the quick reference guide. The consumption values relate to normal conditions and a water hardness of 16 - 20°°E. Different influencing factors such as water temperature or pipe pressure may result in deviations.

Programme	Use	Programme sequence	Additional functions
Intensive 70°	Tableware: ■ Washing pots and pans, non-fragile tableware and cutlery. Level of soiling: ■ Removing stubborn burned or dried-on food remnants containing starch and protein. When using powder detergent, you can also apply a little to the inside of the appliance door.	Intensive: ■ PreRinse ■ Cleaning 70 °C ■ Intermediate rinse ■ Rinsing 50 °C ■ Drying	All → *"Additional functions", Page 23*
auto Auto 45-65°	Tableware: ■ Cleaning mixed tableware and cutlery. Level of soiling: ■ Removing common household food remnants lightly dried-on.	Sensor-controlled: ■ Optimised by sensors depending on the soiling of the washing water.	All → *"Additional functions", Page 23*

Programme	Use	Programme sequence	Additional functions
eco Eco 50°	Tableware: ■ Cleaning mixed tableware and cutlery. Level of soiling: ■ Removing common household food remnants lightly dried-on.	Most economical programme: ■ Pre-Rinse ■ Cleaning 50 °C ■ Intermediate rinse ■ Rinsing 35 °C ■ Drying	All → *"Additional functions", Page 23*
auto Auto 65-75°	Tableware: ■ Washing pots and pans, non-fragile tableware and cutlery. Level of soiling: ■ Removing stubborn burned or dried-on food remnants containing starch and protein.	Sensor-controlled: ■ Optimised by sensors depending on the soiling of the washing water.	All → *"Additional functions", Page 23*
auto Auto 35-45°	Tableware: ■ Washing pots and pans, non-fragile tableware and cutlery. Level of soiling: ■ Removing stubborn burned or dried-on food remnants containing starch and protein.	Sensor-controlled: ■ Optimised by sensors depending on the soiling of the washing water.	IntensiveZone VarioSpeedPlus Shine & Dry → *"Additional functions", Page 23*
night NightProgram	Tableware: ■ Cleaning mixed tableware and cutlery. Level of soiling: ■ Removing common household food remnants lightly dried-on.	Reduced noise: ■ PreRinse ■ Cleaning 50 °C ■ Intermediate rinse ■ Rinsing 35 °C ■ Drying	IntensiveZone Half Load Shine & Dry HygienePlus → *"Additional functions", Page 23*

Programme	Use	Programme sequence	Additional functions
Glass 40°	Tableware: ■ Cleaning delicate tableware, cutlery, temperature-sensitive plastics, glasses and stemware in the stemware basket. Level of soiling: ■ Removing lightly adhering fresh food remnants.	Particularly gentle: ■ PreRinse ■ Cleaning 40 °C ■ Intermediate rinse ■ Rinsing 50 °C ■ Drying	IntensiveZone VarioSpeedPlus Half Load Shine & Dry → *"Additional functions", Page 23*
Quick 45°	Tableware: ■ Cleaning delicate tableware, cutlery, temperature-sensitive plastics and glasses. Level of soiling: ■ Removing lightly adhering fresh food remnants.	Time-optimised: ■ Cleaning 45 °C ■ Intermediate rinse ■ Rinsing 50 °C	Shine & Dry → *"Additional functions", Page 23*
PreRinse	Tableware: ■ Cleaning all types of tableware. Level of soiling: ■ Cold rinsing, intermediate cleaning.	Cold rinse suitable: ■ Pre-Rinse	None

Information for test institutes

Test institutes are provided with information for comparability tests, e.g. according to EN60436.
These are the conditions for conducting the tests, however they are not the results or consumption values.
E-mail enquiries to: dishwasher@test-appliances.com
The product number (E-Nr.) and the production number (FD) are required here. They can be found on the rating plate on the appliance door.

Additional functions

You can find an overview of the additional functions that can be selected here. Different additional functions, which can be found on the control

panel of your appliance, are available depending on the appliance configuration.

Additional function	Use
VarioSpeedPlus	■ The running time is shortened by 20% to 66% depending on the washing programme. ■ Energy and water consumption are increased.
Half Load	■ Switch on with small loads. ■ It is recommended adding less detergent to the detergent dispenser than for a full machine load. ■ The running time is shortened. ■ Energy and water consumption are reduced.
HygienePlus	■ To ensure a higher hygiene status for the appliance and tableware, the temperature is raised and maintained for an extra-lengthy period. ■ Especially suitable for cleaning chopping boards or baby bottles. ■ Continuous use of this function increases the hygiene status. ■ This will increase the running time and energy consumption.
IntensiveZone	■ Switch on with mixed loads containing tableware with different soiling levels, e.g. place very soiled pots and pans in the bottom basket and normally soiled tableware in the top basket. ■ The spray pressure in the bottom basket is increased and the maximum programme temperature held longer. This will increase the running time and energy consumption.
Shine & Dry	■ To avoid marks and improve drying, the quantity of water is increased and the drying phase extended. ■ Energy consumption increases. ■ Use rinse aid.
Energy Save	■ The running time is extended for optimum cleaning and drying results. ■ Energy and water consumption can be reduced.

Features

You can find an overview of the possible features of your appliance and how to use them here.
These features depend on the model of your appliance.

Top basket

Arrange cups and glasses in the top basket.

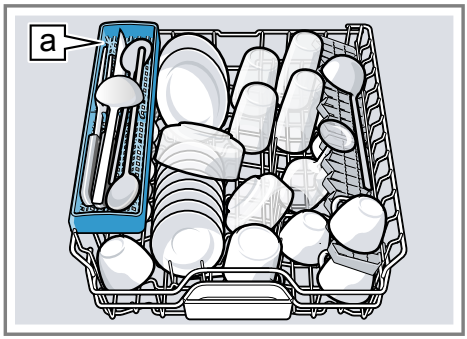

Knife shelf a[1]

You can adjust the height of the top basket to make room for larger items of tableware.

Adjusting top basket with side levers

To wash large items of tableware in the baskets, adjust the shelf position of the top basket.

1. Pull out the top basket.
2. To prevent the basket from suddenly dropping down, hold the side of the basket by the top edge.
3. Press in the levers on the right and left on the outside of the basket.

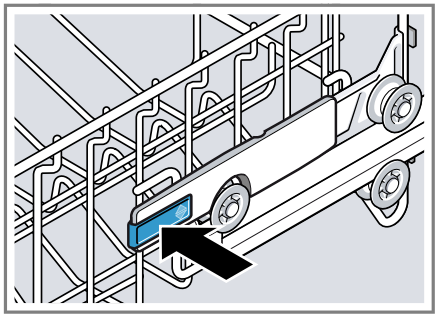

The basket can then slip down slightly.

4. Raise or lower the basket evenly to the right level.
→ *"Basket heights", Page 29*

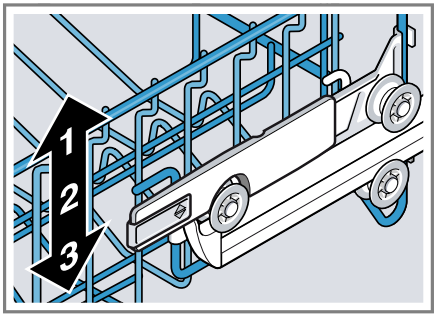

Check that the basket is level on both sides.

5. Slide the basket back in.

Adjusting top basket with pairs of rollers

To wash large items of tableware in the baskets, adjust the shelf position of the top basket.

1. Pull out the top basket.
2. Remove the basket.

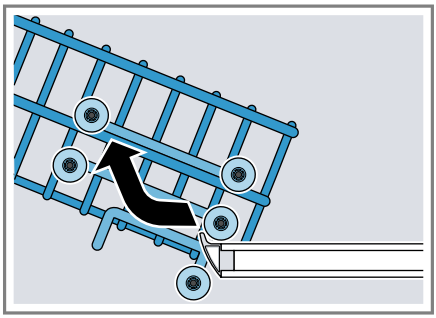

3. Insert the basket at the right basket height.
→ *"Basket heights", Page 29*

[1] Depending on the appliance specifications

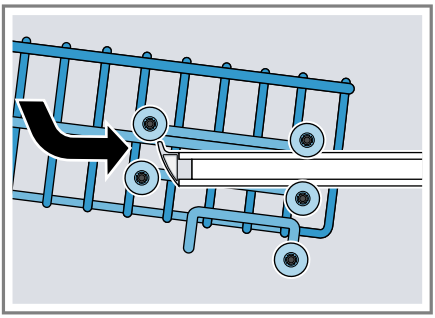

Check that the basket is level on both sides.

4. Slide the basket back in.

Bottom basket

Arrange pans and plates in the bottom basket.

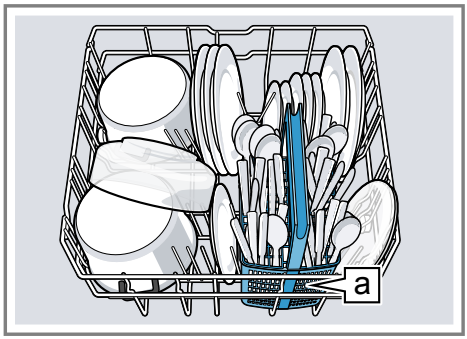

Cutlery basket [a][1]

Large plates up to a diameter of 31/34 cm[1] can be arranged as shown.

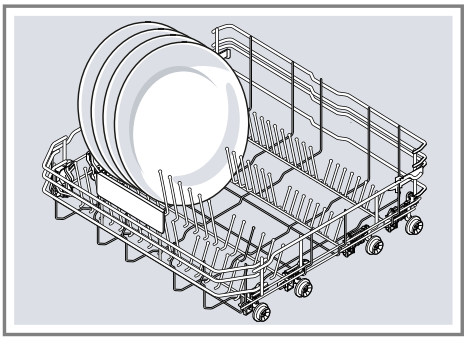

Cutlery basket

Arrange cutlery in the cutlery basket, always without sorting it and with the sharp points downwards.

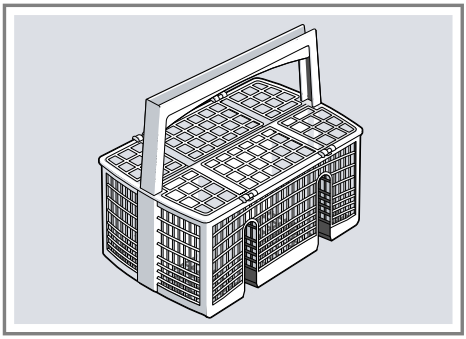

Cutlery drawer

Arrange cutlery in the cutlery drawer.

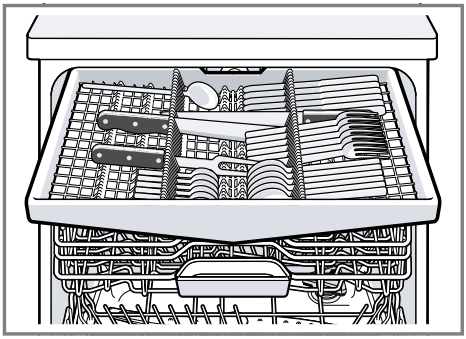

[1] Depending on the appliance specifications

Arrange cutlery with the points and sharp edges downwards.
You can reorganise the cutlery drawer to make more space for longer/wider items of cutlery.[1]

Reorganising cutlery drawer[1]

You can fold down the side shelves and front prongs to make more space for longer/wider items of cutlery.

1. To fold down a side shelf, push the lever forwards ① and fold down the side shelf ②.
2. To fold down the front prongs, push the lever forwards and fold down the prongs③.

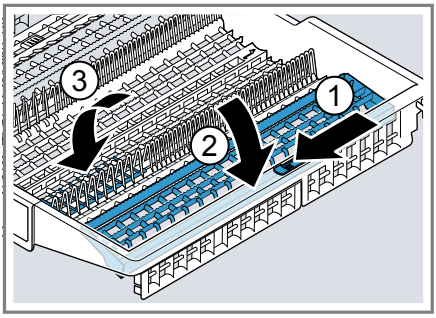

Tip
If you want to return the cutlery drawer to the original position, fold the side shelf back up until it clicks into position.

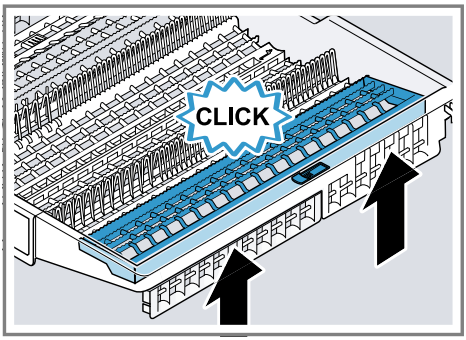

Etagere

Use the etagere and space underneath for small cups and glasses or for large items of cutlery, e.g. wooden spoons or serving cutlery.

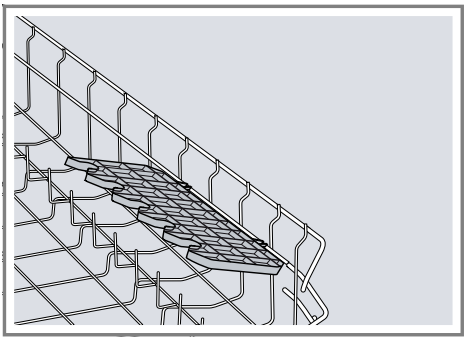

You can adjust the height of the etagere.[1]
If you do not need the etagere, you can fold it up.

Adjusting etagere[1]

You can adjust the height of the etagere.

1. Position the etagere vertically and pull it upwards ①.

[1] Depending on the appliance specifications

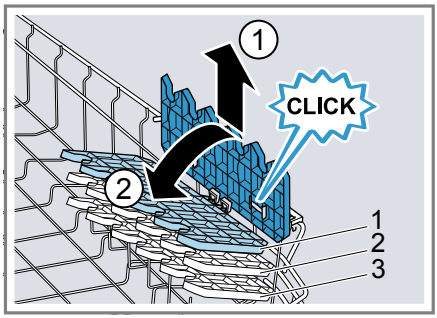

2. Position the etagere at a slight angle and move to the right height ②.
3. Push the etagere down.
✔ The etagere clicks into position.

Folding prongs

Use the folding prongs to position tableware securely, e.g. plates.

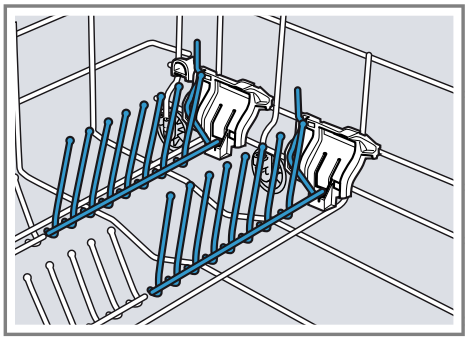

You can fold the prongs down to position pans, bowls and glasses better.[1]

Folding down prongs[1]

If you do not need the prongs, fold them down.

1. Push the lever forwards ① and fold down the prongs ②.

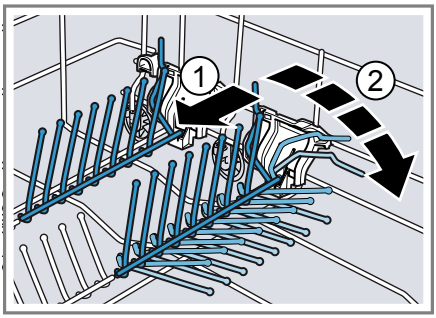

2. To use the folding prongs again, fold them back up.
✔ The folding prongs click in position.

Small items holder

Use the small items holder to position small items of tableware, e.g. light plastic parts.

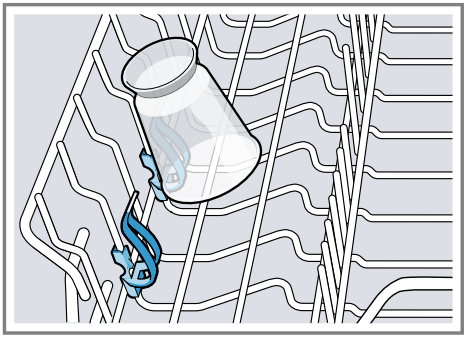

[1] Depending on the appliance specifications

Knife shelf

Use the knife shelf for long, sharp objects and long items of cutlery.

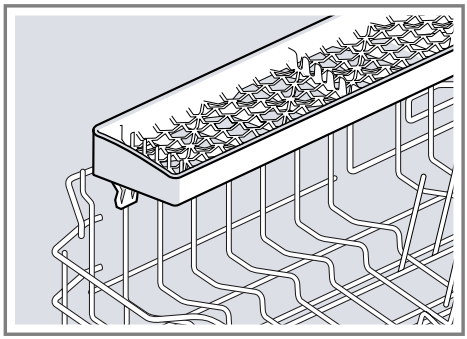

Baking sheet spray head

Use the baking sheet spray head to clean large items of tableware, e.g. trays, grilles and plates.

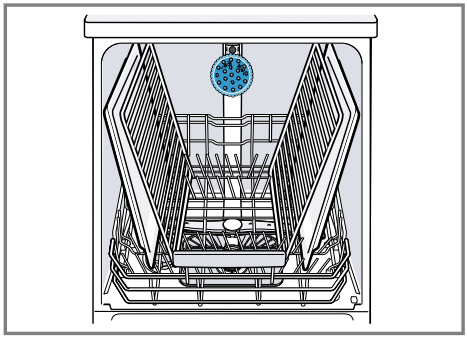

Arrange max. 2 baking sheets and 2 grilles as shown to ensure that the spray jet can reach all parts.

Note: Check that the appliance is always operated with the top basket or the baking sheet spray head.

Inserting baking sheet spray head

Use the baking sheet spray head instead of the top basket to clean large trays, grilles and plates.

1. Remove top basket.
2. Insert the baking sheet spray head in the holder ① and turn to the right ②.

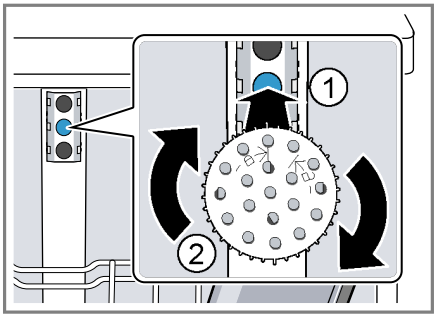

✔ The baking sheet spray head clicks into position.

Removing baking sheet spray head

If you no longer require the baking sheet spray head, remove it from the appliance.

1. Turn the baking sheet spray head anticlockwise and remove from the holder.
2. Insert the top basket in the appliance.

Basket heights

Set the baskets at the right height.

Appliance height 81.5 cm with cutlery basket

Level	Top basket	Bottom basket
1 max. ø	22 cm	31 cm
2 max. ø	24.5 cm	27.5 cm

Level	Top basket	Bottom basket
3 max. ø	27 cm	25 cm

Appliance height 81.5 cm with cutlery drawer

Level	Top basket	Bottom basket
1 max. ø	16 cm	31 cm
2 max. ø	18.5 cm	27.5 cm
3 max. ø	21 cm	25 cm

Appliance height 86.5 cm with cutlery basket

Level	Top basket	Bottom basket
1 max. ø	24 cm	34 cm
2 max. ø	26.5 cm	30.5 cm
3 max. ø	29 cm	28 cm

Appliance height 86.5 cm with cutlery drawer

Level	Top basket	Bottom basket
1 max. ø	18 cm	34 cm
2 max. ø	20.5 cm	30.5 cm
3 max. ø	23 cm	28 cm

Before using for the first time

Configure the settings for initial start-up.

Performing initial start-up

On initial start-up or after a reset to the factory settings, you will need to make settings.

Requirement: The appliance has been installed and connected.
→ *Page 14*

1. Add special salt. → *Page 32*
2. Add rinse aid. → *Page 34*
3. Switch on the appliance.

✔ The display shows the settings for initial start-up.

4. Press > repeatedly until the display shows the required setting.
   - Language
   - Initial start-up
   - Time format
   - Time setting
   - Water hardness
   - Rinse aid disp.
   - Water connection[1]

   You can change these settings and other Basic settings → *Page 42* on the appliance at any time or using the Home Connect app on your mobile device.

[1] Depending on the appliance specifications

5. Press – or + repeatedly until the display shows the right value.

   You can change several settings.
6. To save the settings, press ⓘ for approx. 3 seconds.

Water softening system

Hard water leaves limescale on the tub and tableware and parts of the appliance may become blocked.
To ensure good dishwashing results, you can treat the water with special salt and the water softening system.
To avoid damage to the appliance, water with a hardness above 9 °E must be softened.

Overview of water hardness settings

You can find an overview of the water hardness values that can be selected here.
You can find out how hard your water is from your local water company or by using a water hardness tester.

Water hardness °E	Hardness range	mmol/l	Setting value
0 - 8	Soft	0 - 1.1	0 - 8
9 - 10	Soft	1.2 - 1.4	9 - 10
11 - 12	Medium	1.5 - 1.8	11 - 12
13 - 15	Medium	1.9 - 2.1	13 - 15
16 - 20	Medium	2.2 - 2.9	16 - 20
21 - 26	Hard	3.0 - 3.7	21 - 26
27 - 38	Hard	3.8 - 5.4	27 - 38
39 - 62	Hard	5.5 - 8.9	39 - 62

Note: Set the water hardness determined on your appliance.
→ *"Setting water softening system", Page 31*
With a water hardness of 0 - 8 °E you can dispense with special salt and switch off the water softening system.
→ *"Switching off water softening system", Page 32*

Setting water softening system

Set the water hardness on your appliance.

1. Determine the water hardness and the appropriate setting value.
   → *"Overview of water hardness settings", Page 31*
2. To open the basic settings, press ⓘ for approx. 3 seconds.
3. Press > repeatedly until the display shows "Water hardness".

4. Press – or + repeatedly until the display shows the right water hardness value.
5. To save the settings, press ⓘ for approx. 3 seconds.

Special salt

You can use special salt to soften water.

Adding special salt

If the special salt refill indicator lights up, add special salt to the dispenser for special salt just before the programme starts. The amount of special salt required depends on the water hardness: the higher the water hardness, the greater the amount of special salt required.

ATTENTION!

- Detergent may damage the water softening system.
  - ▸ Only fill the dispenser of the water softening system with special dishwasher salt.
- Special salt can damage the tub due to corrosion.
  - ▸ To make sure that any special salt that escapes is washed out of the tub, add the special salt to the dispenser for special salt immediately before the programme starts.

1. Unscrew the lid of the dispenser for special salt and remove.
2. On initial start-up: Fill the dispenser right up with water.
3. **Note:** Only use special salt for dishwashers.
   Do not use salt tablets.
   Do not use table salt.

   Add the special salt to the dispenser.

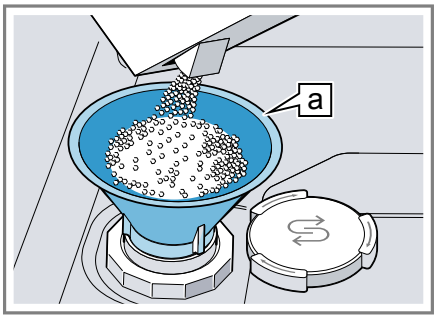

Funnel ⓐ[1]

Fill the dispenser right up with special salt. The water in the dispenser is displaced and forced out.

4. Place the lid back on the dispenser and turn to close.

Switching off water softening system

If you find the special salt refill indicator irritating, e.g. when using combined detergents with salt replacement substances, you can switch the salt refill indicator off.

Note

To avoid damage to the appliance, only switch off the water softening system in the following cases:

- The water hardness is max. 26 °E and you are using combined detergents with salt replacement substances. According to manufacturers, combined detergents with salt replacement substances can generally only be used up to a water hardness of 26°°E without adding special salt.
- The water hardness is 0 - 8°°E. You do not need to use special salt.

1. To open the basic settings, press ⓘ for approx. 3 seconds.

[1] Depending on the appliance specifications

2. Press > repeatedly until the display shows "Water hardness".
3. Press – or + repeatedly until the display shows 0 - 6.
4. To save the settings, press ⓘ for approx. 3 seconds.

✔ The water softening system is switched off and the salt refill indicator is deactivated.

Regeneration of the water softening system

In order to obtain fault-free function of the water softening system, the appliance performs reheating of the water softening system at regular intervals. Regeneration of the water softening system takes place before the end of the main rinse cycle in all programmes. It will increase the run time and consumption values, e.g. water and electricity.

Overview of consumption values with regeneration the water softening system

Here you can find an overview of the maximum additional running time and consumption values during regeneration of the water softening system.
You can find the column applicable to your model in the quick reference guide according to its water consumption in the Eco 50° programme.

Water consumption in litres (depending on model)	Regeneration of the water softening system after x rinse cycles	Additional running time in minutes	Additional water consumption in litres	Additional power consumption in kWh
6.5 / 6.7	8	7	5	0.05
7.5 / 7.7	7	7	5	0.05
9.5	6	7	5	0.05
above 10.5	5	7	5	0.05

The consumption values specified are laboratory measurements determined in accordance with the currently applicable standard and using the Eco 50° programme and the factory value of the water hardness is set to 16 - 20°E.

Rinse aid system

You can use the rinse aid system and rinse aid to get tableware and glasses rinsed perfectly without marks.

Rinse aid

For optimum drying results, use rinse aid.
Only use rinse aid for domestic dishwashers.

Adding rinse aid

If the display shows "Please add rinse aid. ", add rinse aid. Only use rinse aid for domestic dishwashers.

1. Press the catch on the lid of the dispenser for rinse aid ① and lift ②.

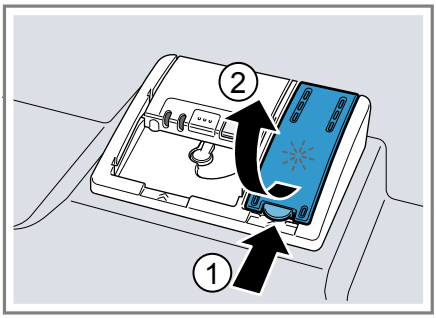

2. Add rinse aid up to the max mark.

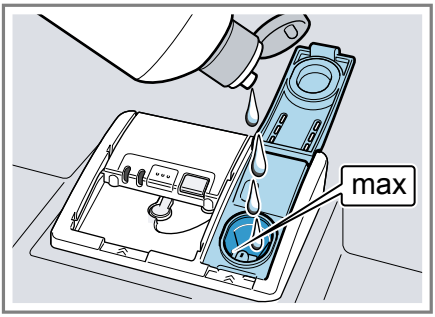

3. If rinse aid spills out, remove it from the tub.

   Spilled rinse aid can cause excessive frothing during the wash cycle.
4. Close the lid of the dispenser for rinse aid.

✔ The lid clicks into position.

Setting the amount of rinse aid

If there are streaks or water marks on tableware, change the amount of rinse aid.

1. To open the basic settings, press ⓘ for approx. 3 seconds.
2. Press > repeatedly until the display shows "Rinse aid dispenser".
3. Press – or + repeatedly until the right amount of rinse aid has been set.

   The value 5 is set at the factory.
   - A low setting adds less rinse aid during the wash cycle and reduces streaking on tableware.
   - A higher setting adds more rinse aid during the wash cycle, reduces water marks and improves the drying result.
4. To save the settings, press ⓘ for approx. 3 seconds.

Switching rinse aid system off

If you find the rinse aid refill indicator irritating, e.g. when using combined detergents with a rinse aid component, you can switch the rinse aid system off.

Tip: The function of rinse aid is limited with combined detergents. You will generally get better results using rinse aid.

1. To open the basic settings, press ⓘ for approx. 3 seconds.
2. Press > repeatedly until the display shows "Rinse aid dispenser".
3. Press – or + repeatedly until the display shows the amount of rinse aid as 0.

4. To save the settings, press ⓘ for approx. 3 seconds.
✔ The rinse aid system is switched off and the rinse aid refill indicator is deactivated.

Detergent

Find out which detergents are suitable for your appliance.

Suitable detergents

Only use detergents that are suitable for dishwashers. Both separate and combined detergents are suitable.
For optimum washing and drying results, use separate detergent, adding Special salt → *Page 32* and Rinse aid → *Page 33* separately.
Modern, powerful detergents mainly use a low-alkaline formulation with enzymes. Enzymes break down starch and remove protein. Oxygen-based bleaching agents are generally used to remove coloured marks, e.g. tea or ketchup.

Note: Follow the manufacturer's instructions for each detergent.

Detergent	Description
Tabs	Tabs are suitable for all cleaning functions and do not need to be measured out. With shorter Programmes tabs sometimes do not dissolve entirely and leave residues of detergent. This may impair the cleaning effect.
Powder detergent	Powder detergent is recommended for shorter Programmes. The dosage can be adjusted to the level of soiling.
Liquid detergent	Liquid detergent works faster and is recommended for shorter Programmes without PreRinse. Sometimes liquid detergent may leak out despite the detergent dispenser being closed. This is not a fault and is non-critical if you remember the following: ■ Only choose a programme without PreRinse. ■ Do not select timer programming for starting the programme. The dosage can be adjusted to the level of soiling.

Tip: Suitable detergents are available online via our website or from Customer Services → *Page 60*.

Separate detergents

Separate detergents are products that do not contain components other than detergent, e.g. powder detergent or liquid detergent.
With powder and liquid detergent the dosage can be individually adjusted to the level of soiling of the tableware.
For better washing and drying results and to avoid damage to the appliance, please additionally use Special salt → *Page 32* and Rinse aid → *Page 33*.

Combined detergent

Besides conventional separate detergents, a number of products are available with additional functions. These products contain not only detergent but also rinse aid and salt replacement substances (3in1) and,

depending on the combination (4in1, 5in1, ...), additional components such as glass protection or stainless steel cleaner.
According to manufacturers, combined detergents generally only function up to a water hardness of 26° °E. With a water hardness above 26° °E you will need to add special salt and rinse aid. For the best washing and drying results we recommend using special salt and rinse aid from a water hardness of 17°°E. If you are using combined detergent, the washing programme is adjusted automatically to ensure the best possible washing and drying result.

Unsuitable detergents

Do not use detergent which could cause damage to the appliance or present a risk to health.

Detergent	Description
Hand washing-up liquid	Hand washing-up liquid can cause increased frothing and damage the appliance.
Detergent containing chlorine	Chlorine residue on tableware may present a risk to health.

Information on detergents

Follow the instructions on detergents in everyday use.

- Detergents marked as "organic" or "ecological" (environmentally friendly) generally contain lower levels of active agents or completely dispense with certain substances. The cleaning effect may be restricted here.
- Set the rinse aid and the water softening system to the separate detergent or combined detergent in use.
- According to manufacturers, combined detergents with salt replacement substances can only be used up to a certain water hardness, usually 26 °E, without adding special salt. For the best washing and drying results we recommend using special salt from a water hardness of 17 °E.
- To prevent sticking, only touch detergents in a water-soluble pouch with dry hands and only ever place them in a dry detergent dispenser.
- Even if the rinse aid and special salt refill indicators light up, washing programmes will run properly with combined detergents.
- The function of rinse aid is limited with combined detergents. You will generally get better results using rinse aid.
- Use tablets with a special drying performance.

Adding detergent

1. To open the detergent dispenser, press the locking latch.
2. Add the detergent to the dry detergent dispenser.

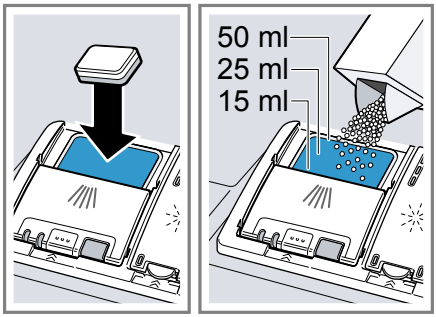

If you are using tablets, one is enough. Insert the tablets in a horizontal position.

If you are using powder or liquid detergent, follow the manufacturer's instructions and quantities for dosage in the detergent dispenser.
20 ml – 25 ml detergent is sufficient for normal soiling. If tableware is only lightly soiled, slightly less than the amount of detergent specified is usually sufficient.

3. Close the lid of the detergent dispenser.

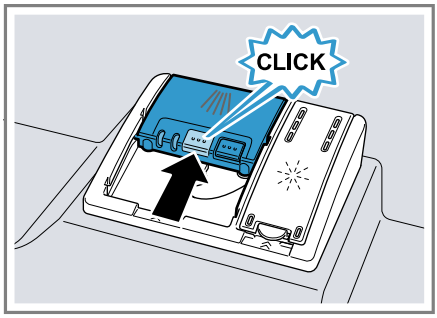

✔ The lid clicks into position.
✔ The detergent dispenser will open automatically at the optimum time during the programme. Powder or liquid detergent will spread around the washing tank and dissolve there. Tablets will fall into the tablet collecting tray and dissolve in the right dosage. In order to ensure that tablets can dissolve evenly, do not place any other objects in the tablet collecting tray.

Tableware

Only clean tableware that is suitable for dishwashers.

Note: Decorated glassware and parts made of aluminium or silver may fade or discolour with dishwashing. Delicate types of glass may turn cloudy after a few washing cycles.

Damage to glass and tableware

Avoid damage to glass and tableware.

Cause	Recommendation
The following tableware is not dishwasher-safe: ■ Items of cutlery and tableware made from wood ■ Decorated glassware, antique and hand-crafted tableware ■ Plastic parts not resistant to heat ■ Tableware made from copper or tin ■ Tableware soiled with ash, wax, lubricating grease or paint ■ Very small items of tableware	Only put tableware in the dishwasher if it is marked as dishwasher-safe by the manufacturer.
Glass and tableware was not dishwasher-safe.	Only put glasses and china in the dishwasher if it is marked as dishwasher-safe by the manufacturer.
The chemical composition of the detergent causes damage.	Use a detergent marked as gentle on tableware by the manufacturer.
Highly caustic alkaline or highly acidic cleaning agents, in particular commercial or industrial cleaning agents, are not suitable for dishwashers in conjunction with aluminium.	If you are using highly caustic alkaline or highly acidic cleaning agents, in particular commercial or industrial cleaning agents, do not put aluminium parts in the dishwasher interior.

Cause	Recommendation
The water temperature of the programme is too high.	Select a programme with lower temperatures. After the programme has ended, take glassware and cutlery out of the appliance without delay.

Arranging tableware

Arrange the tableware correctly to optimise the dishwashing result and prevent damage to both the appliance and tableware.

Tips

- Using the appliance allows you to save energy and water compared to washing-up by hand.
- See our website for examples of how to arrange load your appliance efficiently, free of charge.
- To save energy and water, do not load more place settings than the number specified.
  → *"Technical data", Page 61*
- For better washing and drying results, position items with curves or recesses at an angle so the water can run off.

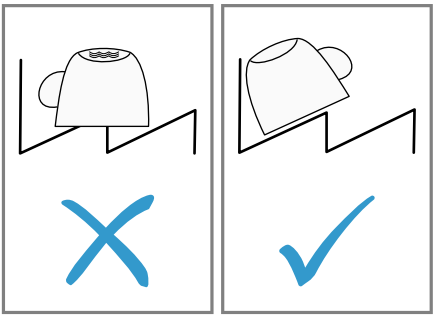

1. Remove large remnants of food from your tableware.
   Prerinsing under running water is not necessary - nor is this a good idea in terms of saving energy.
2. Observe the following when arranging tableware:
   - Put heavily soiled tableware in the bottom basket, e.g. pans. The more powerful the spray jet, the better the dishwashing result will be.
   - To prevent damage to tableware, arrange it so it is stable and cannot tip over.
   - To prevent injury, arrange cutlery with the points and sharp edges downwards.
   - Position containers with the openings facing down so no water can collect in them.
   - Do not block the spray arms - make sure that they can turn freely.
   - Do not place small parts in the tablet collecting tray and do not block it with tableware so as not to obstruct the lid of the detergent dispenser.

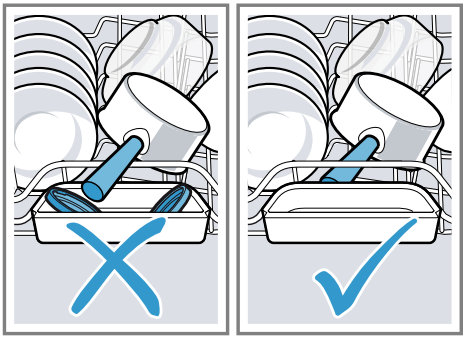

Removing tableware

⚠ **WARNING**
Risk of injury!
Hot tableware can cause burns to the skin. When hot, tableware is sensitive to shock, may crack and can result in injury.

- When the programme has ended, do not empty the appliance until the tableware has cooled down for a while.

1. To prevent water dripping on the tableware, unload it starting at the bottom and working up.
2. Check the tub and accessories for soiling and clean if necessary.
   → *"Cleaning and servicing", Page 44*

Basic operation

You can find out everything you need to know about operating your appliance here.

Opening appliance door

1. If the childproof lock[1] is not activated, open the appliance door.
2. If the childproof lock[1] is activated, press the catch of the lock to the right ① and open the appliance door ②.

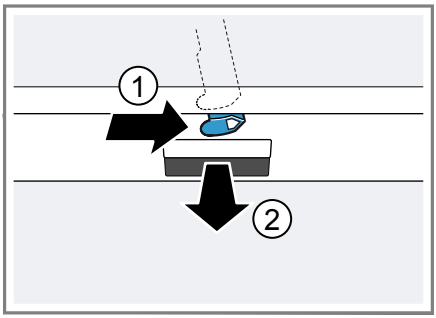

Switching on appliance

- Press ①.

  The Eco 50° programme is set by default.
  The Eco 50° programme is an especially environmentally friendly programme and ideal for normally soiled tableware. It is the most efficient programme for the combination of energy/water consumption for this type of tableware and evidences conformity with the EU Ecodesign Order.
  If you do not perform any actions on the appliance for 15 minutes, the appliance will automatically switch off.

Setting a programme

To adjust the wash cycle to the soiling level of the tableware, select a suitable programme.

- Press the right programme button.
  → *"Programmes", Page 21*

[1] Depending on the appliance specifications

Setting additional functions

You can set additional functions to complete the washing programme selected.

Note: The additional functions which can be used depend on the programme selected.
→ *"Programmes", Page 21*

- ▸ Press the button for the relevant additional function.
  → *"Additional functions", Page 23*
- ✔ The additional function is set and the additional function button flashes.

Setting timer programming

You can delay the start of the programme by up to 24 hours.

1. Press ◷.
2. Press − or + repeatedly until the display shows the right time.

   Depending on the setting of the time display, the end of the programme is shown on the display either with "with display "Finish in"" (e.g. 3h 25min) or "or "Finish at"." (e.g. 15:20 hours). You can change this setting in the Basic settings → *Page 42*.
3. To activate timer programming, press Start.

Tip: To deactivate timer programming, press Reset 3 sec. for approx. 3 seconds.

Starting the programme

- ▸ Press Start.
- ✔ The display shows the programme information.
- ✔ The programme has ended when the display shows "Finished".

Notes

- If you want to add more tableware while the appliance is running, do not use the tablet collecting tray as a handle for the top basket. You might touch the partially dissolved tablet.
- You can only change a programme when running if you cancel it.
  → *"Terminate programme", Page 40*
- The appliance switches off automatically 1 minute after the end of the programme to save energy. If you open the appliance door immediately after the programme has ended, the appliance will switch off after 4 seconds.

Interrupting programme

Note: When you open the appliance door once the appliance has heated up, leave the door slightly ajar for a few minutes and then close it. This will help prevent excess pressure building up in the appliance and stop the appliance door bursting open.

1. Press ⏻.
- ✔ The programme is saved and the appliance switches off.
2. Press ⏻ to resume the programme.

Terminate programme

To end a programme early or to switch from a programme that has already started, you will need to terminate it first.

1. Open the appliance door.
2. Press Reset 3 sec. for approx. 3 seconds.
- ✔ The programme is terminated and ends after approx. 1 minute.

✔ The display shows "Programme was terminated.", followed by "Finished".

Display programme information

You can show information about programmes and additional functions on the display.

1. Press ⓘ.
2. Press the programme button or an additional function.

Switching off appliance

1. Please note the information on Safe use → *Page 11*.
2. Press ⏻.
3. To prevent damage from dripping water, turn the water tap off tight (not applicable to appliances with Aqua-Stop).

Tip: If you press ⏻ during the wash cycle, the programme currently running will be interrupted. When you switch the appliance back on, the programme continues automatically.

Basic settings

You can configure the appliance to meet your needs.

Overview of basic settings

The basic settings depend on the features of your appliance.

Basic setting	Selection	Description
Time setting	00:00 - 24:00	Set the current time. The setting depends on the time format selected.
Time format	12 h 24 h[1]	Set the time format.
Time display	In hours Time[1]	Set the time display for the end of the programme. "with display "Finish in"" shows the remaining time the programme has to run, e.g. 3h 25min. "or "Finish at"." shows the time when the programme will end, e.g. 15:20 hours.
Sprache/Language	See selection on the appliance.	Select the menu language.
Water hardness	0 - 62 16 - 20 medium[1]	Set the water hardness. → *"Overview of water hardness settings", Page 31*
Rinse aid dispenser	0 - 6 5[1]	Set or switch off the amount of rinse aid to be dispensed. → *"Setting the amount of rinse aid", Page 34*
Sensor setting	Standard[1] Sensitive Very sensitive	Set the water sensor for identifying soiling. → *"Sensors", Page 14*
ExtraDry	on off[1]	Switch Extra Dry on or off for each operation. For a better drying result the temperature is increased during the final rinse. This may increase the running time slightly. Please take care with delicate tableware.
Water connection	Cold water[1] Hot water	Set cold water or hot water connection. Only set the appliance to hot water if this can be prepared with little energy and a suitable installation is available, e.g. solar heating system with circulation line. The water temperature should be at least 40 °C and max. 60 °C.

[1] Factory setting (may vary according to model)

Basic setting	Selection	Description
Eco forecast	on off[1]	Switch EcoCheck on or off. When selecting the programme, the average water consumption and energy consumption is briefly shown on the display.
emotionLight	on[1] off	Switch the interior lighting of the appliance on or off. The interior lighting switches on automatically when the appliance door is opened. When the appliance door is opened, the interior lighting switches off automatically after 15 minutes.
Front display	on[1] off	Switch the front display on or off.
timeLight	on[1] off	Switch timeLight on or off. While the programme is running, status information is projected onto the floor below the appliance door, e.g. the remaining running time. If the base panel is pulled forwards or if the appliance is installed at eye level with the cabinet front fitted flush, the display is not visible.
infoLight	on[1] off	Switch infoLight on or off. While the programme is running, a spot of light is projected onto the floor below the appliance door. This light will not be visible if the appliance is installed at eye level with the cabinet front fitted flush. If the appliance door is not completely closed, the spot of light will flash. The programme has ended when the spot of light is no longer visible on the floor.
Start programme	Eco 50°C[1] Last selected programme	Set a default programme for when the appliance is switched on.
Tone volume	Scale with multiple levels.	Set the signal volume at the end of the programme. Level 0 switches the signal tones off.
Button volume	Scale with multiple levels	Set the button volume during operation. Level 0 switches the button tones off.
Child-proof lock	on off[1]	Switch the Electric childproof lock on or off.
Eco drying	on[1] off	Activate or deactivate automatic door opening at the end of the Eco programme.

[1] Factory setting (may vary according to model)

Basic setting	Selection	Description
Greeting	on[1] off	Switch display of the brand name logo on or off when the appliance is switched on.
Factory setting	Reset	Restore changed settings to the factory settings. The settings for initial start-up must be configured.

[1] Factory setting (may vary according to model)

Changing basic settings

1. Open the appliance door.
2. Press ⏻.
3. To open the basic settings, press ⓘ for approx. 3 seconds.
4. Press > repeatedly until the display shows the required setting.
5. Press − or + repeatedly until the display shows the right value.

   You can change several settings.
6. To save the settings, press ⓘ for approx. 3 seconds.

Setting the time

1. To open the basic settings, press ⓘ for approx. 3 seconds.
2. Press > repeatedly until the display shows "Time setting".
3. Press − or + repeatedly until the display shows the required time.

   Holding down − and + will change the set values in 10-minute steps.
4. To save the settings, press ⓘ for approx. 3 seconds.

Cleaning and servicing

To keep your appliance working efficiently for a long time, it is important to clean and maintain it carefully.

Cleaning the tub

⚠ **WARNING**
Risk of harm to health!
Using detergents containing chlorine may result in harm to health.
- Never use detergents containing chlorine.

1. Remove any coarse soiling in the interior with a damp cloth.
2. Add detergent to the detergent dispenser.
3. Select the programme with the highest temperature.
   → *"Programmes", Page 21*
4. Start the programme without tableware. → *Page 40*

Self-cleaning interior[1]

To remove deposits, the appliance self-cleans the interior at regular intervals.
The programme sequence is automatically adjusted for self-cleaning, e.g. the cleaning temperature is briefly increased. Consumption values, e.g. water and electricity, may also increase.

[1] Depending on the appliance specifications

If the interior is no longer self-cleaned adequately and deposits occur, see this information:
→ *"Cleaning the tub", Page 44*.

Cleaning products

Only use suitable cleaning products to clean your appliance.
→ *"Safe use", Page 11*

Tips on appliance care

Follow the tips on appliance care to make sure your appliance functions properly at all times.

Action	Benefit
Wipe the door seals, the front of the dishwasher and the control panel regularly using a damp cloth and washing-up liquid.	This ensures the parts of the appliance will remain clean and hygienic.
If the appliance is not going to be used for a while, leave the door slightly ajar.	This will prevent unpleasant odours.

Filter system

The filter system removes coarse soiling from the dishwashing cycle.

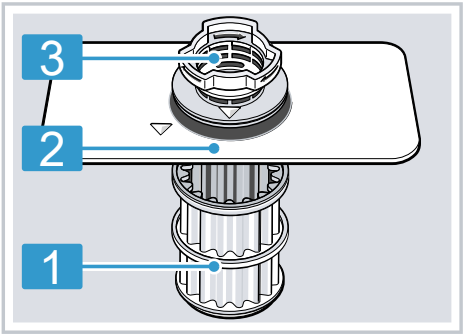

1	Micro filter
2	Fine filter
3	Coarse filter

Cleaning filters

Soiling in the dishwashing water may block the filters.

1. After each wash check the filters for residue.
2. Turn the coarse filter anticlockwise ① and remove the filter system ②.
   – Check that no foreign objects fall into the sump.

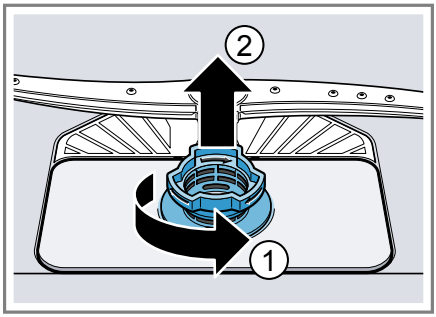

3. Pull down the micro filter to remove.

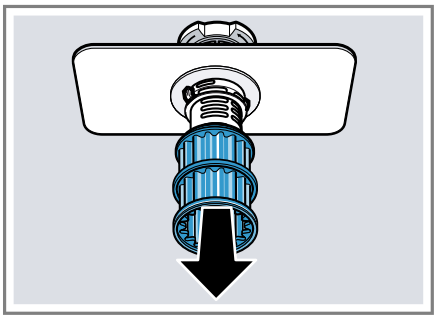

4. Press the locking catches ① together and lift the coarse filter out ②.

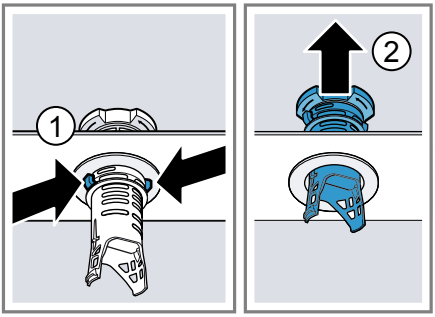

5. Clean the filter elements under running water.

   Carefully clean the rim of dirt between the coarse and the fine filter.
6. Re-assemble the filter system.

   Make sure that the locking catches on the coarse filter click into position.
7. Insert the filter system into the appliance and turn the coarse filter clockwise.

   Make sure that the arrow markings match up.

Cleaning spray arms

Limescale and soiling in the dishwashing water may block the nozzles and bearings on the spray arms. Clean the spray arms regularly.

1. Unscrew the upper spray arm ① and pull down to remove ②.

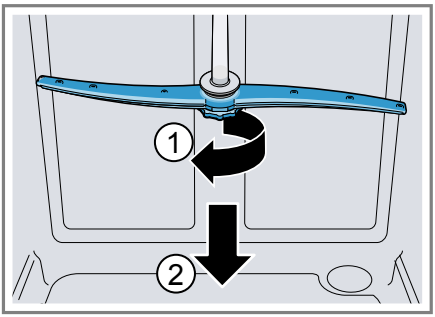

2. Pull up the lower spray arm to remove.

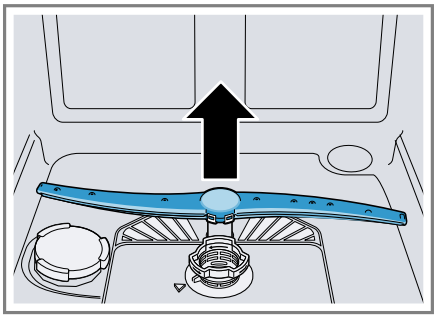

3. Check the outlet nozzles on the spray arms for blockages under running water and remove any foreign bodies.
4. Insert the lower spray arm.
✔ The spray arm clicks into position.
5. Insert the upper spray arm and screw it firmly in place.

Troubleshooting

You can rectify minor faults on your appliance yourself. Read the troubleshooting information before contacting Customer Service. This will avoid unnecessary costs.

⚠ **WARNING**
Risk of electric shock!
Improper repairs are dangerous.
- ▸ Repairs to the appliance should only be carried out by trained specialist staff.
- ▸ Only use genuine spare parts when repairing the appliance.
- ▸ If the power cord of this appliance is damaged, it must be replaced with a special connection cable, which is available from the manufacturer or his Customer Service.

Appliance safety

Errors	Cause	Troubleshooting
Appliance door will not open or cannot be opened easily.	Childproof lock is activated.	▸ Open the appliance door. → *Page 39*

Error code / Fault display / Signal

Errors	Cause	Troubleshooting
E:07 lights up.	Intake opening of Zeolith container is covered by items of tableware.	▸ Re-arrange the tableware in the appliance so the Intake opening of the Zeolith container → *Page 17* is no longer obstructed.
E:12 lights up.	Heating element is furred up.	1. Descale the appliance. 2. Operate the appliance with the Water softening system → *Page 31*.
E:14 lights up.	Water protection system is activated.	1. Turn off the water tap. 2. Call Customer Service → *Page 60*.
E:15 lights up.	Water protection system is activated.	1. Turn off the water tap. 2. Call Customer Service → *Page 60*.
E:16 lights up.	Water is continuously running into the appliance.	1. Turn off the water tap. 2. Call Customer Service → *Page 60*.
E:18 or indicator for water supply lights up.	Supply hose is kinked.	▸ Install the supply hose without kinks.

Errors	Cause	Troubleshooting
E:18 or indicator for water supply lights up.	Water tap is turned off.	▶ Turn on the water tap.
	Water tap is jammed or furred up.	▶ Turn on the water tap. The flow rate must be at least 10 l/min when the water supply is open.
	Filter in the water supply is blocked.	**1.** Switch off the appliance. **2.** Pull out the mains plug. **3.** Turn off the water tap. **4.** Unscrew the water connection. **5.** Remove the filter from the supply hose 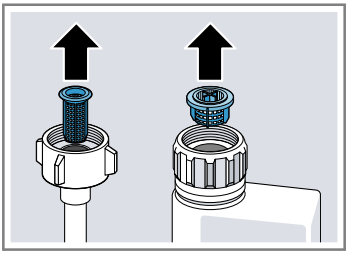 **6.** Clean the filter. **7.** Re-insert the filter in the supply hose. **8.** Screw the water connection back on. **9.** Check the water connection for leaks. **10.** Restore the power supply. **11.** Switch the appliance on.
E:22 lights up.[1]	Filters are soiled or blocked.	▶ Clean the filters. → *"Cleaning filters", Page 45*
E:24 lights up.	Wastewater hose is blocked or kinked.	**1.** Reposition the wastewater hose without kinks. **2.** Remove residues.
	Siphon connection is still sealed.	▶ Check the connection to the siphon and open if necessary.
	Cover of the wastewater pump is loose.	▶ Secure the cover of the Wastewater pump → *Page 59* so it clicks into position.

[1] Depending on the appliance specifications

Errors	Cause	Troubleshooting
E:25 lights up.	Wastewater pump is blocked.	▶ Clean the wastewater pump. → *"Clean wastewater pump", Page 59*
	Cover of the wastewater pump is loose	▶ Secure the cover of the Wastewater pump → *Page 59* so it clicks into position.
E:27 lights up.	Mains voltage is too low.	This is not a fault on the appliance. **1.** Contact an electrician. **2.** Have the mains voltage and electrical installation checked by an electrician.
Another error code appears on the display. E:01 to E:30	A technical fault is present.	**1.** Press ①. **2.** Unplug the appliance or switch off the fuse. **3.** Wait at least 2 minutes. **4.** Insert the mains plug of the appliance in a socket or switch on the fuse. **5.** Switch the appliance on. **6.** If the problem occurs again: – Press ①. – Turn off the water tap. – Pull out the mains plug. – Contact Customer Service → *Page 60* and give the error code.

Washing results

Errors	Cause	Troubleshooting
Tableware is not dry.	No rinse aid used or dosage set too low.	**1.** Add Rinse aid → *Page 33*. **2.** Set the amount of rinse aid to be dispensed. → *"Setting the amount of rinse aid", Page 34*
	Selected programme has no drying phase	▶ Select a programme with drying.
	Water collects in recesses of the tableware or cutlery.	▶ Position tableware at an angle where possible.

Errors	Cause	Troubleshooting
Tableware is not dry.		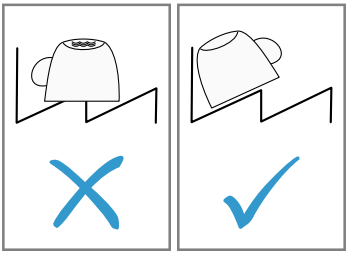
	The combined detergent used has a poor drying performance.	1. Use rinse aid to improve drying performance. 2. Use a different combined detergent with a better drying performance.
	Extra Dry not activated to improve drying performance.	▶ Activate Extra Dry → *Page 42*.
	Tableware removed too early or drying process not yet ended.	1. Wait until the programme ends. 2. Only remove tableware 30 minutes after the programme has ended.
	Rinse aid used has a limited drying performance.	▶ Use a name-brand rinse aid. Eco products may have limited effectiveness.
Plastic tableware is not dry.	Not a fault. As plastic does not store heat so well, it also does not dry as well.	▶ No remedial action possible.
Cutlery is not dry.	Cutlery not arranged properly in the cutlery basket or cutlery drawer.	1. Arrange the cutlery properly. → *"Arranging tableware", Page 38* 2. Arrange cutlery individually where possible. 3. Avoid points of contact.
Appliance interior still wet after wash cycle.	Not a fault. The condensation drying principle causes water droplets in the tub – they are indeed desirable here. The moisture in the air condenses on the inside walls, runs off and is pumped out.	No action required.
Remnants of food on tableware.	Tableware was placed too close together.	1. Arrange tableware with sufficient space in between. The spray jets must reach the surfaces of the tableware. 2. Avoid points of contact.

Errors	Cause	Troubleshooting
Remnants of food on tableware.	Basket is overfilled.	**1.** Arrange tableware with sufficient space in between. The spray jets must reach the surfaces of the tableware. **2.** Avoid points of contact.
	Spray arm rotation is blocked.	▶ Arrange tableware so that it does not obstruct spray arm rotation.
	Spray arm nozzles are blocked.	▶ Clean the Spray arms → *Page 46*.
	Filters are soiled.	▶ Clean the filters. → *"Cleaning filters", Page 45*
	Filters are inserted incorrectly and/or not engaged.	**1.** Insert the filters properly. → *"Filter system", Page 45* **2.** Engage the filters.
	Washing programme selected too weak.	▶ Select a more intensive washing programme. ▶ Adjust the sensitivity of the sensors. → *"Sensors", Page 14*
	Tableware has been precleaned too intensely. The sensors chose a weaker programme. Stubborn soiling cannot be entirely removed.	▶ Only remove large remnants of food and do not prerinse tableware. ▶ Adjust the sensitivity of the sensors. → *"Sensors", Page 14*
	Tall narrow receptacles in corner areas are not rinsed adequately.	▶ Do not position tall narrow receptacles at too great an angle or in corner areas.
	Top baskets on right and left are not set to same height.	▶ Set the top baskets on the left and right to the same level. → *"Top basket", Page 25*
Detergent residue in the appliance	Lid of the detergent dispenser is blocked by items of tableware parts and will not open.	**1.** Arrange tableware in the top basket tableware so the tab collecting tray is not obstructed by tableware. → *"Arranging tableware", Page 38* Items of tableware are blocking the dispenser lid. **2.** Do not place tableware or fragrance dispensers in the tablet collecting tray.
	The lid of the detergent dispenser is blocked by the tab and will not open.	▶ Position the tab in the detergent dispenser crosswise, not vertically.

Errors	Cause	Troubleshooting
Detergent residue in the appliance	Tabs are used in the quick or short programme. Dissolving time of the tab is not attained.	▶ Select a more intensive Programme or use Powder detergent → *Page 35*.
	Washing effect and dissolving performance are reduced after a prolonged storage time or detergent is very lumpy.	▶ Change your detergent → *Page 35*.
Water marks on plastic parts.	Due to laws of physics droplet formation on plastic surfaces is unavoidable. After drying water marks are visible.	▶ Select a more intensive programme. ▶ Position tableware at an angle. → *"Arranging tableware", Page 38* ▶ Use rinse aid. → *"Rinse aid", Page 33* ▶ Set the water softening system higher. → *"Setting water softening system", Page 31*
Wipeable or water-soluble coatings are present inside the appliance or on the door.	Detergent substances are deposited there. These coatings cannot generally be removed with chemicals.	▶ Change your detergent → *Page 35*. ▶ Clean the appliance mechanically.
	White coating is deposited in the appliance interior.	**1.** Set the water softening system correctly. → *"Setting water softening system", Page 31* In most cases you will need to increase the setting. **2.** Change your detergent if required.
	Special salt dispenser is not screwed tight.	▶ Screw the special salt dispenser tight.
Stubborn white coatings are present on tableware, inside the appliance or the door.	Detergent substances are deposited there. These coatings cannot generally be removed with chemicals.	▶ Change your detergent → *Page 35*. ▶ Clean the appliance mechanically.
	The hardness range is set incorrectly or the water hardness is greater than 62°°E (8,9 mmol/l).	▶ Set the Water softening system → *Page 31* to the water hardness or add special salt.

Errors	Cause	Troubleshooting
Stubborn white coatings are present on tableware, inside the appliance or the door.	3in1/organic/eco detergent is not effective enough.	▶ Set the Water softening system → *Page 31* to the water hardness and use separate detergents (proprietary detergent, special salt, rinse aid).
	Too little detergent is being used.	▶ Increase the amount of detergent used or change Detergent → *Page 35*.
	Washing programme selected too weak.	▶ Select a more intensive washing programme. ▶ Adjust the sensitivity of the sensors. → *"Sensors", Page 14*
Tea residue or lipstick marks on tableware.	Washing temperature is too low.	▶ Select a programme with a higher washing temperature.
	Too little detergent is being used or is unsuitable.	▶ Use a suitable Detergent → *Page 35* and follow the manufacturer's instructions for the amount to be used.
	Tableware has been precleaned too intensely. The sensors chose a weaker programme. Stubborn soiling cannot be entirely removed.	▶ Only remove large remnants of food and do not prerinse tableware. ▶ Adjust the sensitivity of the sensors. → *"Sensors", Page 14*
Coloured coatings (blue, yellow, brown) that are difficult or impossible to remove are present inside the appliance or on stainless steel tableware.	The formation of films is due to substances contained in vegetables (cabbage, celery, potatoes, noodles, etc.) or tap water (manganese).	▶ Clean the appliance. You can remove deposits with Mechanical cleaning → *Page 44* or a machine cleaning product. It may not always be possible to completely remove deposits but they are harmless to health.
	The formation of films is due to metal components on silver or aluminium tableware.	▶ Clean the appliance. You can remove deposits with Mechanical cleaning → *Page 44* or a machine cleaning product. It may not always be possible to completely remove deposits but they are harmless to health.

Errors	Cause	Troubleshooting
Coloured deposits (yellow, orange, brown) that are easy to remove are present inside the appliance (mainly at the bottom).	The formation of films is due to ingredients of food remnants and tap water (limescale) "soaplike".	1. Check the setting of the water softening system. → *"Setting water softening system", Page 31* 2. Add special salt. → *"Adding special salt", Page 32* 3. If you are using combined detergents (tabs), activate the water softening system. Follow the information about detergents. → *"Information on detergents", Page 36*
Plastic parts inside the appliance are discoloured.	Plastic parts inside the appliance may become discoloured during the life of the dishwasher.	▶ Discolouration can come about and will not impair functioning of the appliance.
Plastic parts are discoloured.	Washing temperature is too low.	▶ Select a programme with a higher washing temperature.
	Tableware has been precleaned too intensely. The sensors chose a weaker programme. Stubborn soiling cannot be entirely removed.	▶ Only remove large remnants of food and do not prerinse tableware. ▶ Adjust the sensitivity of the sensors. → *"Sensors", Page 14*
Removable streaks are present on glasses, glassware with a metallic appearance and cutlery.	Amount of rinse aid to be dispensed is set too high.	▶ Set the rinse aid system to a lower setting. → *"Setting the amount of rinse aid", Page 34*
	No rinse aid has been added.	▶ → *"Adding rinse aid", Page 34*
	Detergent residue is present in the final rinse. Lid of the detergent dispenser is blocked by tableware items and will not open fully.	1. Arrange tableware in the top basket tableware so the tab collecting tray is not obstructed by tableware. → *"Arranging tableware", Page 38* Items of tableware are blocking the dispenser lid. 2. Do not place tableware or fragrance dispensers in the tablet collecting tray.

Errors	Cause	Troubleshooting
Removable streaks are present on glasses, glassware with a metallic appearance and cutlery.	Tableware has been pre-cleaned too intensely. The sensors chose a weaker programme. Stubborn soiling cannot be entirely removed.	▶ Only remove large remnants of food and do not prerinse tableware. ▶ Adjust the sensitivity of the sensors. → *"Sensors", Page 14*
Irreversible clouding of glassware.	Glasses are not dishwasher-proof, only suitable for dishwashers.	▶ Use dishwasher-proof glasses. ▶ Avoid a lengthy steam phase (standing time after wash cycle ends). ▶ Use a programme with a lower temperature. ▶ Set the softening system to the water hardness. → *"Setting water softening system", Page 31* ▶ Use detergent with a glass protection component.
Rust spots on cutlery.	Cutlery is not sufficiently rust-resistant. Knife blades are often more severely affected.	▶ Use rust-resistant tableware.
	Cutlery may also rust if washed together with rusting items.	▶ Do not wash rusting items.
	Salt content in washing water is too high.	**1.** Remove any spilled special salt from the tub. **2.** Screw the cap of the special salt dispenser on tight.
Detergent residue is present in the detergent dispenser or the tablet collecting tray.	Spray arms were blocked by tableware so detergent was not rinsed out.	▶ Check that the spray arms are not blocked and can rotate freely.
	Detergent dispenser was damp when detergent was added.	▶ Only add detergent to a detergent dispenser when dry.
Excessive formation of foam occurs.	Hand washing-up liquid is present in dispenser for rinse aid.	▶ Immediately add rinse aid to the dispenser. → *"Adding rinse aid", Page 34*
	Rinse aid has been spilled.	▶ Remove the rinse aid with a cloth.
	Detergent or appliance care product used causes excessive foaming.	▶ Change the brand of detergent.

Information on display panel

Errors	Cause	Troubleshooting
Special salt refill indicator lights up.	Insufficient special salt.	▶ Add Special salt → *Page 32*.
	Sensor does not detect special salt tablets.	▶ Do not use special salt tablets.
Refill indicator for special salt does not light up.	Water softening system is switched off.	▶ Setting water softening system → *Page 31*
Refill indicator for rinse aid lights up.	Insufficient rinse aid.	1. Add Rinse aid → *Page 33*. 2. Set the amount of rinse aid to be dispensed. → *"Setting the amount of rinse aid", Page 34*
Refill indicator for rinse aid does not light up.	Rinse aid system is switched off.	▶ → *"Setting the amount of rinse aid", Page 34*

Malfunctions

Errors	Cause	Troubleshooting
Water is left in the appliance at the end of the programme.	Filter system or area under the filters is blocked.	1. Clean the Filters → *Page 45*. 2. Clean the Wastewater pump → *Page 59*.
	Programme has not yet ended.	▶ Wait until the programme ends or cancel the programme with reset. ▶ → *"Terminate programme", Page 40*
Appliance cannot be switched on or operated.	Appliance functions have failed.	1. Pull out the mains plug or switch off the fuse. 2. Wait at least 2 minutes. 3. Connect the appliance to the power supply. 4. Switch the appliance on.
Appliance does not start.	The mains fuse has tripped.	▶ Check the relevant fuse.
	Mains cable is not inserted.	1. Check whether the socket works. 2. Check whether the mains cable is properly inserted in the socket and on the rear of the appliance.
	Appliance door is not closed properly.	▶ Close the appliance door.
Programme starts automatically.	You did not wait until programme ended.	▶ → *"Terminate programme", Page 40*

Errors	Cause	Troubleshooting
Appliance stops during the programme or cuts out.	Appliance door is not closed properly.	▶ Close the appliance door.
	Power and/or water supply has been interrupted.	1. Check the power supply. 2. Check the water supply.
	Top basket is pressing against inner door and preventing appliance door from being closed securely.	▶ Check whether the rear panel of the appliance is being pressed in by a socket or hose holder that has not been removed. ▶ Arrange the tableware so that no parts project beyond the basket and prevent the appliance door from closing properly.

Mechanical damage

Errors	Cause	Troubleshooting
Appliance door cannot be closed.	Door lock has been activated.	▶ Close the appliance door with greater force.
	Door cannot be closed due to installation method.	▶ Check whether the appliance has been installed properly. When closed, the appliance door, its decor or attached parts should not knock against adjacent cabinets or the worktop.
Lid on the detergent dispenser cannot be closed.	Detergent dispenser or lid are blocked by sticky detergent residue.	▶ Remove detergent residue.

Noise

Errors	Cause	Troubleshooting
Filling valves making knocking noises.	Caused by the domestic installation. No appliance fault present. Does not affect functioning of the appliance.	▶ Can only be remedied in the domestic installation.
Knocking or rattling noise.	Spray arm is striking tableware.	▶ Arrange tableware so that the spray arms do not strike tableware.
	With a small load the water jets directly strike against the tub.	▶ Distribute the tableware evenly. ▶ Load the appliance with more tableware.

Errors	Cause	Troubleshooting
Knocking or rattling noise.	Light items of tableware move about during the wash cycle.	▶ Position light items of tableware securely.

Clean wastewater pump

Large remnants of food or foreign bodies can block the wastewater pump. As soon as the washing water no longer drains properly, the wastewater pump must be cleaned.

⚠ **WARNING**
Risk of injury!
Sharp and pointed objects or fragments of glass may block the waste water pump and cause injury.
- Remove any foreign bodies carefully.

1. Disconnect the appliance from the power supply.
2. Remove the top and bottom basket.
3. Remove the filter system.
4. Scoop out any water.
   Use a sponge if necessary.
5. Prise off the pump cover using a spoon and grip it by the crosspiece.

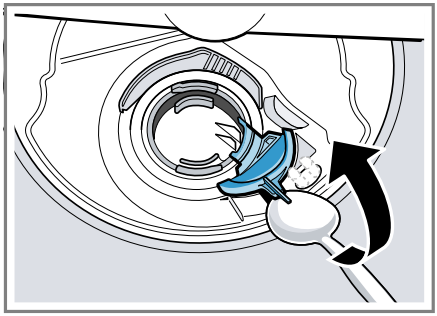

6. Lift the pump cover inwards at an angle and remove.
7. Remove any remnants of food and foreign bodies in the area of the impeller.
8. Insert the pump cover ① and press down ②.

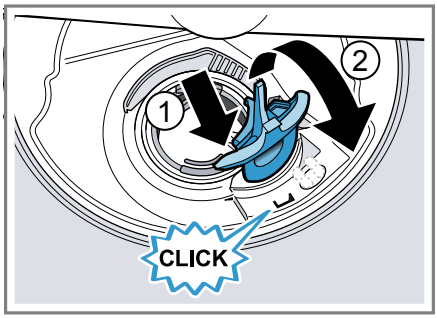

✔ The pump cover clicks into position.

9. Install the filter system.
10. Insert the top and bottom basket.

Transportation, storage and disposal

You can find out here how to prepare your appliance for transportation and storage. You will also find out how to dispose of old appliances.

Removing the appliance

1. Disconnect the appliance from the power supply.
2. Turn off the water tap.
3. Detach the drainage connection.
4. Detach the drinking water connection.
5. Loosen any screws fastening the appliance to cabinet parts.
6. Remove the base panel if fitted.
7. Pull the appliance out carefully, along with the hose behind it.

Protect appliance from frost

If there is a risk of frost where the appliance will be standing, e.g. in a holiday home, empty the appliance completely.

- Empty the appliance. → *Page 60*

Transporting the appliance

To avoid damage to the appliance, empty it before transporting.

Note: Always transport the dishwasher upright to prevent residual water getting into the machine's controls and damaging the appliance.

1. Remove tableware from the appliance.
2. Secure loose parts.
3. Turn on the water tap.
4. Switch on appliance. → *Page 39*
5. Select the programme with the highest temperature. → *"Programmes", Page 21*
6. Start the programme. → *Page 40*
7. To drain the appliance, terminate the programme after approx. 4 minutes. → *"Terminate programme", Page 40*
8. Switch off the appliance. → *Page 41*
9. Turn off the water tap.
10. To empty the residual water out of the appliance, detach the supply hose and let the water drain out.

Disposing of old appliance

Valuable raw materials can be reclaimed by recycling.

⚠ **WARNING**
Risk of harm to health!
Children can lock themselves in the appliance, thereby putting their lives at risk.

- With redundant appliances, unplug the power cord. Then cut through the cord and damage the lock on the appliance door beyond repair so that the appliance door will no longer close.

1. Unplug the appliance from the mains.
2. Cut through the power cord.
3. Dispose of the appliance in an environmentally friendly manner.

This appliance is labelled in accordance with European Directive 2012/19/EU concerning used electrical and electronic appliances (waste electrical and electronic equipment - WEEE). The guideline determines the framework for the return and recycling of used appliances as applicable throughout the EU.

Customer Service

If you have any queries, are unable to rectify faults on the appliance yourself or if your appliance needs to be repaired, contact Customer Service. You can solve many problems yourself by consulting the information on troubleshooting in these instructions or on our website. If this is not the case, contact our Customer Service. We will always find an appropriate solution and try to avoid unnecessary visits being made by a Customer Service technician.
With any warranty claims we will make sure that your appliance is repaired by trained Customer Service technicians using genuine spare parts, including after the manufacturer's warranty has expired.
For safety reasons repairs to the appliance should only be carried out by trained specialist staff. The warranty claim becomes void if repairs or interventions have been carried out by persons not authorised by us for that purpose or if our appliances have been fitted with spare, supplementary

or accessory parts that were not genuine parts and then resulted in a defect.
Function-relevant genuine spare parts according to the corresponding Ecodesign Order can be obtained from Customer Service for a period of at least 10 years from the date on which your appliance was placed on the market within the European Economic Area.

Note: Under the terms of the manufacturer's warranty the use of Customer Service is free of charge.

Detailed information about the warranty period and terms of warranty in your country are available from Customer Service, your dealer or our website.
When contacting Customer Service, you will need the product number (E-Nr.) and the production number (FD) of your appliance.
The contact details for Customer Service can be found in the enclosed Customer Service directory or on our website.

Product number (E-Nr.) and production number (FD)

The product number (E-Nr.) and the production number (FD) can be found on the rating plate of the appliance.
The rating plate is located inside the appliance door.
Make a note of your appliance's details and the Customer Service telephone number to find them again quickly.

AQUA-STOP guarantee[1]

In addition to warranty claims against the seller under the purchase agreement and in addition to our manufacturer's warranty, we will provide a replacement under the following conditions.

- If our Aqua-Stop system is defective and causes water damage, we will make good the damage for private users. To ensure protection from water damage, the appliance must be connected to the power supply.
- The liability guarantee is valid for the service life of the appliance.
- A claim can only be made under the guarantee if the appliance has been correctly installed and connected with Aqua-Stop according to our instructions; this also includes correctly fitting the Aqua-Stop extension (genuine accessory). Our guarantee does not cover defective supply lines or fittings up to the Aqua-Stop connection on the tap.
- If your appliance is fitted with Aqua-Stop, you can leave your appliance unattended during operation and the tap turned on afterwards. The tap only needs to be turned off if you are away from home for a long period, e.g. on holiday for several weeks.

Technical data

Facts and figures for your appliance can be found here.

Weight	Max.: 60 kg
Voltage	220 - 240 V, 50 Hz or 60 Hz

[1] Depending on the appliance specifications

Power rating	2000 - 2400 W
Fuse	10 - 16 A
Power consumption	Off mode/standby mode: 0.50 W Left-on mode: 0.50 W Networked standby: - W Time in left-on mode: 0 min Time after which appliance is switched to networked standby mode: - min Complies with the latest regulations (EU) for energy label and ecological design at the time of placing on the market. Additional functions and settings may increase power consumption and times.
Water pressure	■ Min. 0.05 MPa (0.5 bar) ■ Max. 1 MPa (10 bar)
Inlet rate	Min. 10 l/min
Water temperature	Cold water. Hot water max.: 60 °C
Capacity	12 - 15 place settings

More information about your model can be found online at https://www.bsh-group.com/energylabel[1]. This web address is linked to the official EU EPREL product database. At the time of printing its web address had not yet been published. Please then follow the instructions on searching for models. The model identifier is made up of the characters before the slash in the product number (E-Nr.) on the rating plate.

Alternatively you can also find the model identifier in the first line of the EU energy label.

[1] Only applies to countries in the European Economic Area

BSH Hausgeräte GmbH
Carl-Wery-Straße 34
81739 München
GERMANY
www.siemens-home.bsh-group.com

Manufactured by BSH Hausgeräte GmbH under Trademark License of Siemens AG

9001483831 (990930) 642 TW
en